R454b
Refrigerant

SUBMITTAL DATA SHEET

Series Name: Multi-Zone High Tier Extreme Heat With Shut-off Valve_All Non-Ducted
Model Number: MO6HX-H48B-2A

Multi Zone Heat Pump System	
Location:	Approval:
Engineer:	Date:
Submitted to:	Construction:
Submitted by:	Unit #:
Reference:	Drawing #:

OUTDOOR SPECIFICATION		
Compressor Type		TWIN-ROTARY
Compressor Model		EKPQ440D1UMUB
Refrigerant		R454B
Refrigerant Oil Charge(mL)		1300
Refrigerant Oil		VG75
Outdoor Air Flow (Max) (CFM)		4,502.8
Outdoor Noise Level (dBA)		65.0
Dimension (W×D×H)	**inch**	37-1/2 x 16-5/16 x 52-1/2
	mm	952 × 415 × 1,333
Package (W×D×H)	**inch**	43-1/8 x 19-1/2 x 58-1/4
	mm	1,095 × 495 × 1,480
Net/Gross Weight	**lbs**	246 / 277
	kg	111.8 / 125.5

ELECTRICAL	
Power Supply	208/230V,60Hz,1Ph
System MCA	43.0
Connection Wiring	AWG 14/4
System MOCP	45.0
Compressor RLA	27
Outdoor Fan Motor RLA	2.5
Outdoor Fan Motor W	170
Indoor Fan Motor RLA	/
Indoor Fan Motor W	/
System Power Input @ Cooling (W)	3,920 (800 ~ 5,400)
System Power Input @ Heating (W)	3,880 (800 ~ 5,200)
MCA: Min. circuit amps (A)	**MOCP**: Max. over current protection (A)
RLA: Rated load amps (A)	**W:** Fan motor rated output (W)

EFFICIENCY			
Cooling		**Heating**	
SEER2	23.0	**HSPF2-4**	11.0
EER2	12	**COP**	3.7

PERFORMANCE of Cooling	
Cooling (Btu/hr)	
Rated Capacity	47,000
Min/Max Capacity	12,000 ~ 57,000
Moisture Removal(L/h)	4.4
Standard Operating Range(°F/°C)	-22~122 (-30~50)
Rated Cooling Conditions:	Indoor: 80°F DB/67°F WB
	Outdoor: 95°F DB/75°F WB

PERFORMANCE of Heating	
Heating (Btu/hr)	
1. @ 47°F Rated	49,000
1. @ 47°F Min/Max Capacity	13,000 ~ 57,000
2. @ 17°F Rated(H32)	44,000
3. @ 5°F Rated: Capacity / COP(H42)	47,000 / 2
3. @ 5°F Max: Capacity	47,000
Standard Operating Range(°F/°C)	-22~75 (-30~24)
1. Conditions:	Indoor: 70°F DB/60°F WB
	Outdoor: 47°F DB/43°F WB
2. Conditions:	Indoor: 70°F DB/60°F WB
	Outdoor: 17°F DB/15°F WB
3. Conditions	Indoor: 70°F DB/60°F WB
	Outdoor: 5°F DB/5°F WB

PIPING	
Liquid Size	6 x 1/4" (6 x 6.35 mm)
Gas Size	4 x 3/8"+2 x 1/2" (4 x 9.52 mm+2 x 12.7 mm)
Max. Piping Length for all rooms(ft/m)	262 (80)
Max. Piping Length for one IDU(ft/m)	115 (35)
lax. Height Difference of IDU and ODU(ft/r	49 (15)
Refrigerant Pre-charged Amount(oz/kg)	152 (4.3)
Refrigearant Precharge Length(ft/m)	25 (7.5) x 6
Additional Charge of Refrigerant (Φ6.35 (1/4") liquid pipe) ((oz/ft)/(g/m))	0.16 (15)
Additional Charge of Refrigerant (Φ9.52 (3/8") liquid pipe) ((oz/ft)/(g/m))	0.32 (30)
Connection Method	Flared

Outdoor Unit Dimension

Unit: inch (mm)

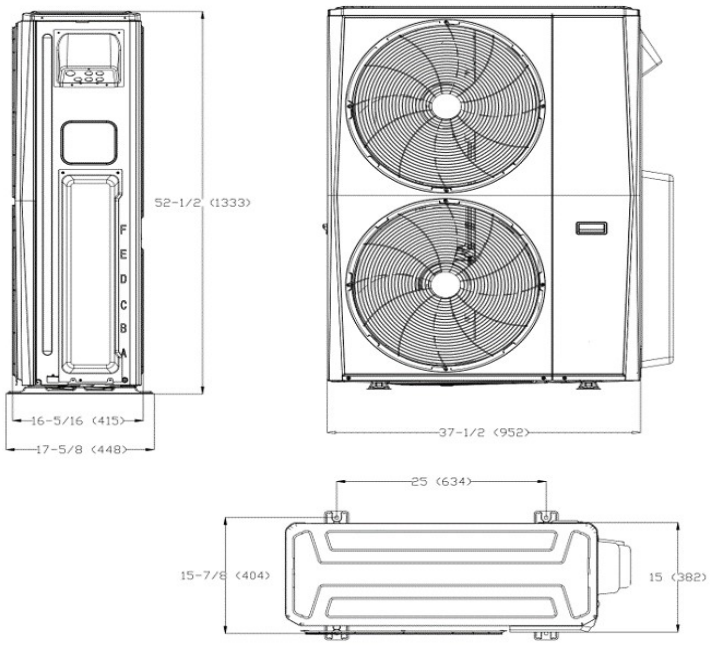
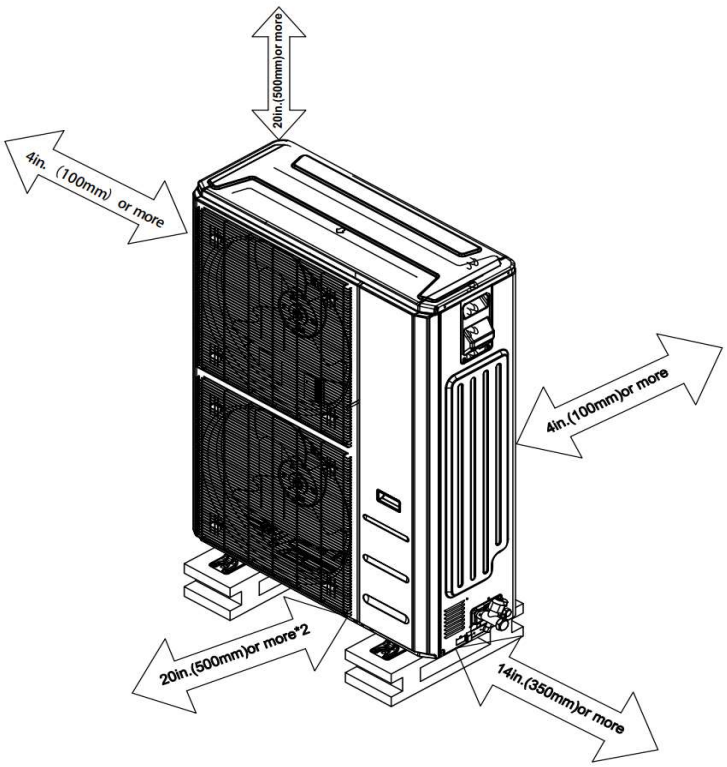
Installation Instruction